RMS-7907075C - RADIUSCX CLUTCH

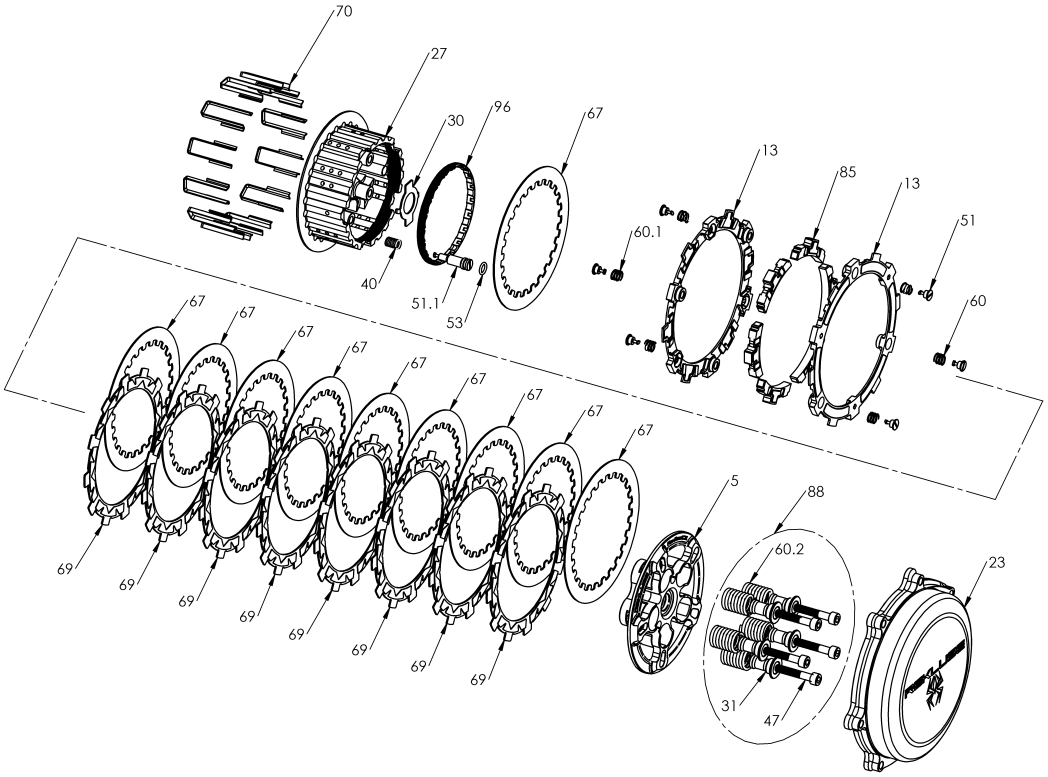

Item	Part Number	Item Description	Qty
5	113-112A	PRESSURE PLATE - RadiusCX - Y250	1
13	140-223B	EXP 3.0 BASE - H250 TD	2
23	169-992A	CLUTCH COVER YZ125 05+	1
96	172-002A	HUB ADJUSTER RING - 250 Size	1
27	178-112A	CENTER CLUTCH HUB - RadiusCX/Core - 01 Y250	1
30	183-005A	HARDWARE - Torqdrive Pin Clutch Tab Lock Washer 32mm	1
47	411-127	FASTENER - 6mm stainless Steel button head socket - 8 mm	1
50	414-137	HARDWARE - M6 Copper Washer	1
Not Shown	414-141	HARDWARE - TO Spacing Washer	1
51	415-000	FASTENER - Quarter Turn Pin	6
Not Shown	415-000	FASTENER - Quarter Turn Pin	2
51.1	415-002A	FASTENER - Quarter-Turn Pin, CX Hub	1
53	418-911A	HARDWARE - V75 Viton O-ring, Black, Size -010	1
Not Shown	418-911A	HARDWARE - V75 Viton O-ring, Black, Size -010	1
Not Shown	419-121	HARDWARE - 0.5 Black Free Play Gain Rubber Band	1

RMS-7907075C - RADIUSCX CLUTCH

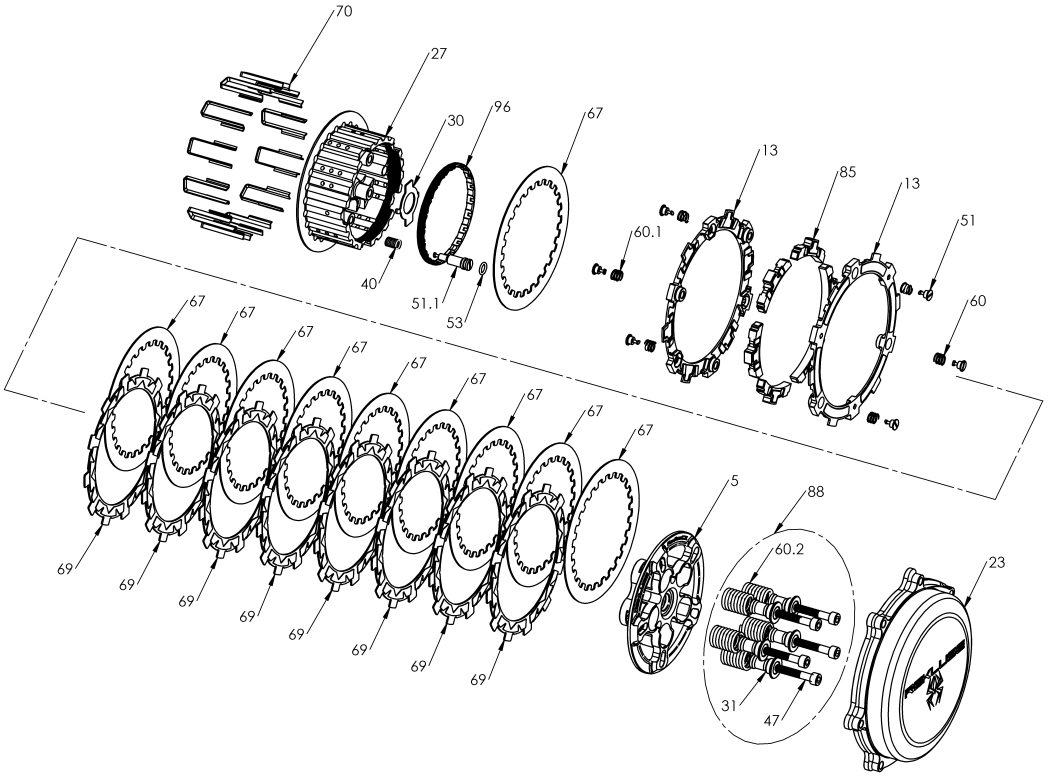

Item	Part Number		Item Description	Qty
Not Shown	419-711A		HARDWARE - Velcro Strap 1in X 12in	1
40	440-005A		SPRING - CX Hub Coil Spring	1
Not Shown	442-002		EXP ADJUSTMENT SPRING EXP - Medium (Red)	3
60	442-002		EXP ADJUSTMENT SPRING EXP - Medium (Red)	3
Not Shown	442-003		EXP ADJUSTMENT SPRING EXP - Heavy (Blue)	3
60.1	442-003		EXP ADJUSTMENT SPRING EXP - Heavy (Blue)	3
67	465-400B		DRIVE PLATE - 0.040 Core RMS TC250 Precision	10
69	469-304A		FRICTION DISK - H250 TORQ-DRIVE	8
70	471-300		BASKET SLEEVE - Dirt Bikes	12
Not Shown	491-011A		MISCELLANEOUS - Permanent Marker Pen	1
85	741-014B		EXP 3.0 WEDGE ASSEMBLY - H250 - Medium	6
88	744-040		CORE CLUTCH SPRING KIT - 250 - Heavy (Gold)	1
31		184-101B	HARDWARE - EXP Screw Sleeve	5
47.1		411-140	FASTENER - M6-1 x 35mm Thermal Black Socket Cap Screw	5
60.2		442-104	PRESSURE PLATE SPRING - 250 Class Bikes Heavy Gold	5