RMS-7904045C - RADIUSCX CLUTCH

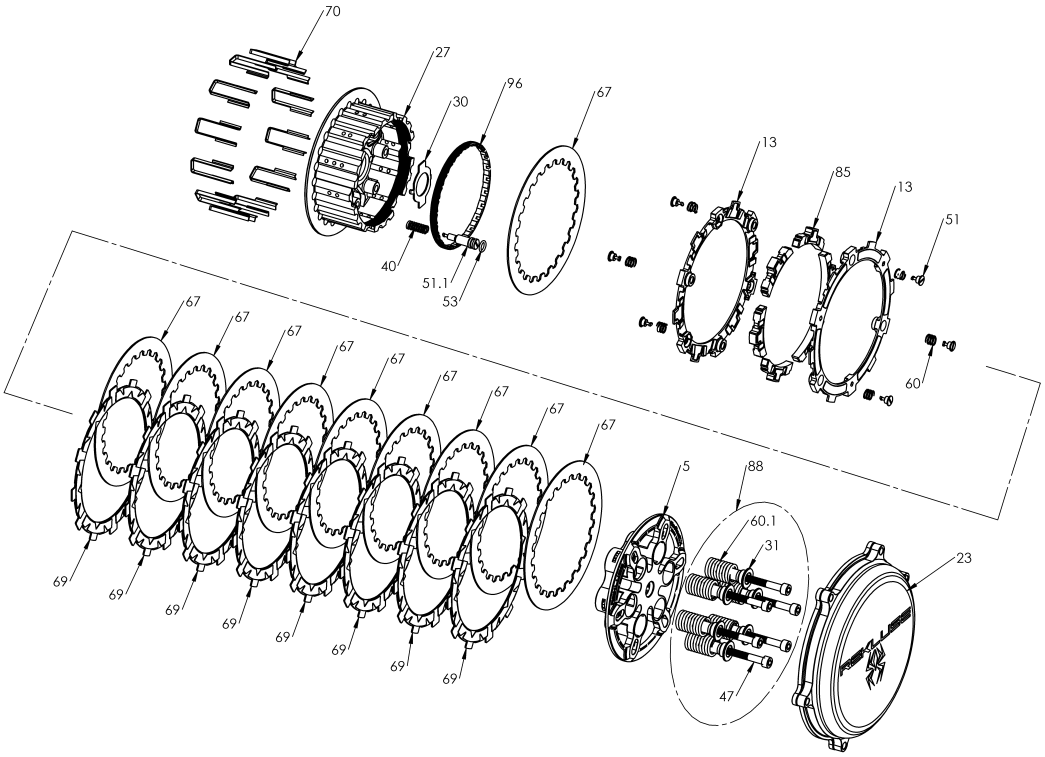

Item	Part Number	Item Description	Qty
5	113-106A	PRESSURE PLATE - RadiusCX - K450	1
13	140-220B	EXP 3.0 BASE - H450 TD	2
23	169-745A	CLUTCH COVER - TorqDrive - KX450F (06+)	1
96	172-001A	HUB ADJUSTER RING - 450 Size	1
27	178-106A	CENTER CLUTCH HUB - RadiusCX/Core - 06 K450	1
30	183-001A	HARDWARE - Core 450 Center Clutch Tab Lock Washer	1
51	415-000	FASTENER - Quarter Turn Pin	6
Not Shown	415-000	FASTENER - Quarter Turn Pin	2
51.1	415-002A	FASTENER - Quarter-Turn Pin, CX Hub	1
53	418-911A	HARDWARE - V75 Viton O-ring, Black, Size -010	1
Not Shown	418-911A	HARDWARE - V75 Viton O-ring, Black, Size -010	1
Not Shown	419-121	HARDWARE - 0.5 Black Free Play Gain Rubber Band	1
Not Shown	419-711A	HARDWARE - Velcro Strap 1in X 12in	1
40	440-005A	SPRING - CX Hub Coil Spring	1
Not Shown	442-001	EXP ADJUSTMENT SPRING EXP - Light (Silver)	3

RMS-7904045C - RADIUSCX CLUTCH

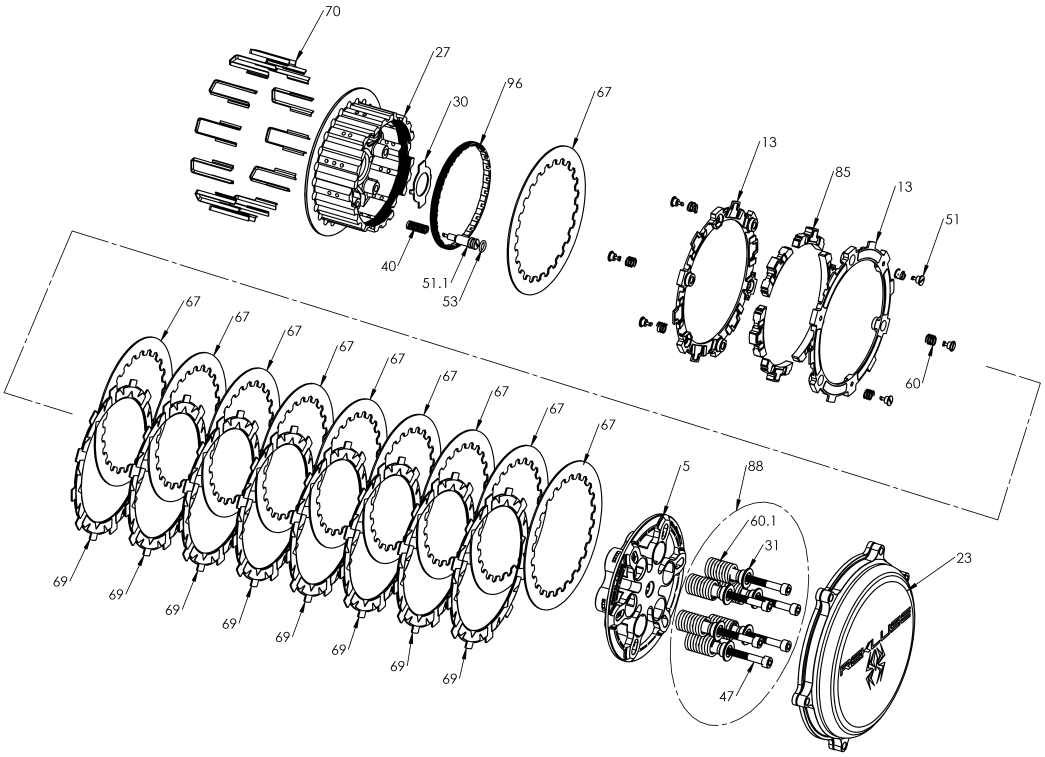

Item	Part Number		Item Description	Qty
60	442-002		EXP ADJUSTMENT SPRING EXP - Medium (Red)	6
Not Shown	442-003		EXP ADJUSTMENT SPRING EXP - Heavy (Blue)	3
67	465-481B		DRIVE PLATE - 0.048 zSP/Core RMS H450 Precision	10
69	469-301A		FRICTION DISK - H450 TORQ-DRIVE	8
70	471-300		BASKET SLEEVE - Dirt Bikes	12
Not Shown	491-011A		MISCELLANEOUS - Permanent Marker Pen	1
85	741-012B		EXP 3.0 WEDGE ASSEMBLY - H450 - Medium	6
88	744-010		CORE CLUTCH SPRING KIT - 450 - Medium (Red)	1
31		184-101B	HARDWARE - EXP Screw Sleeve	6
47		411-135	FASTENER - M6 x 40mm Socket Head Cap Screw	6
60.1		442-101	PRESSURE PLATE SPRING - 450 Class Bikes Medium Red (incl	6